BIO|Max KISS Abutment

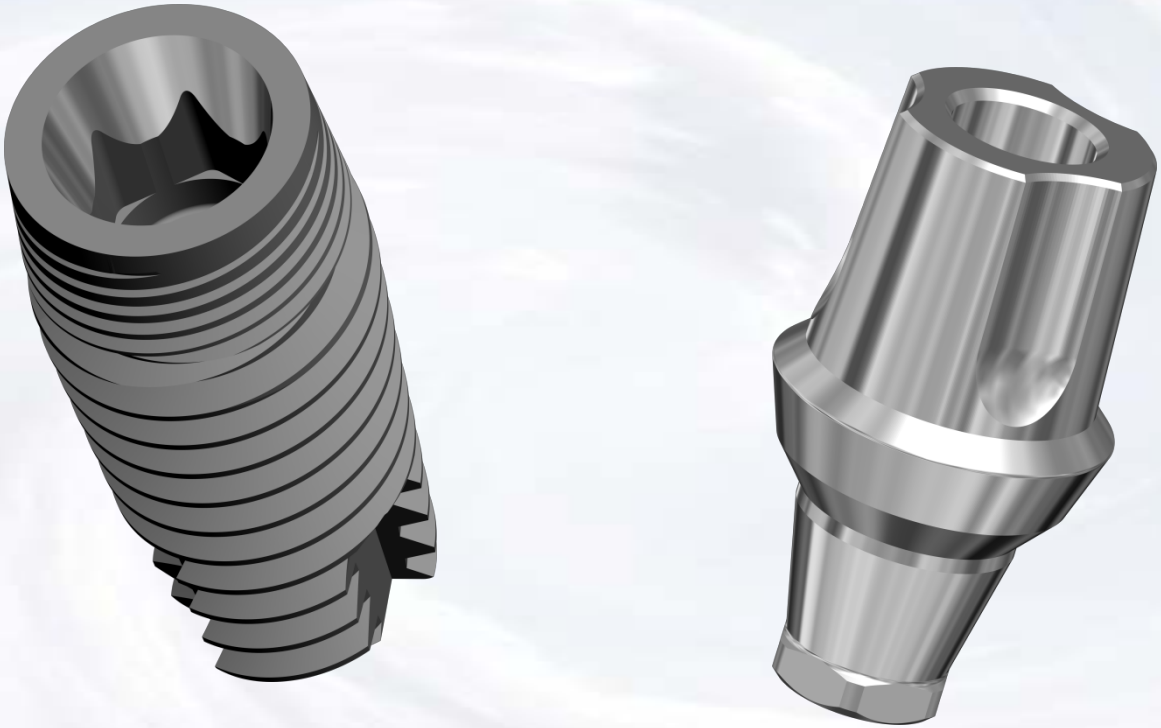

Blue Sky Bio

BIO|Max KISS Abutment

Assemble screw driver with
Thumb Knob

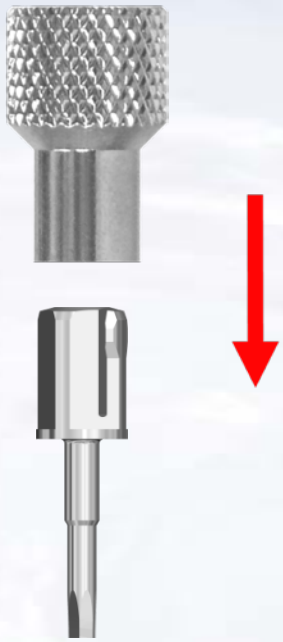

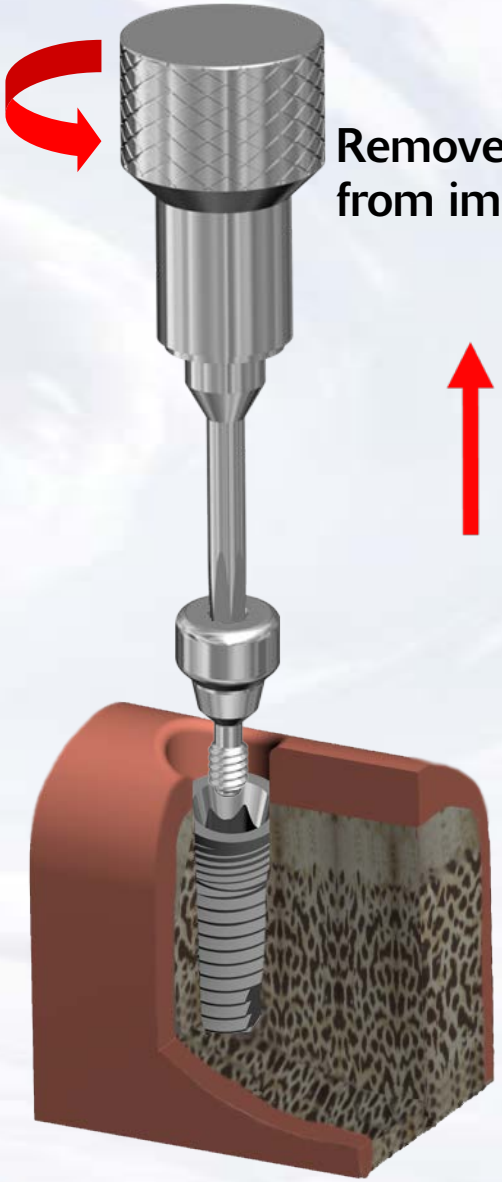

Remove healing abutment
from implant

Blue Sky Bio

BIO|Max KISS Abutment

Insert the Kiss abutment into the implant ensuring the appropriate orientation

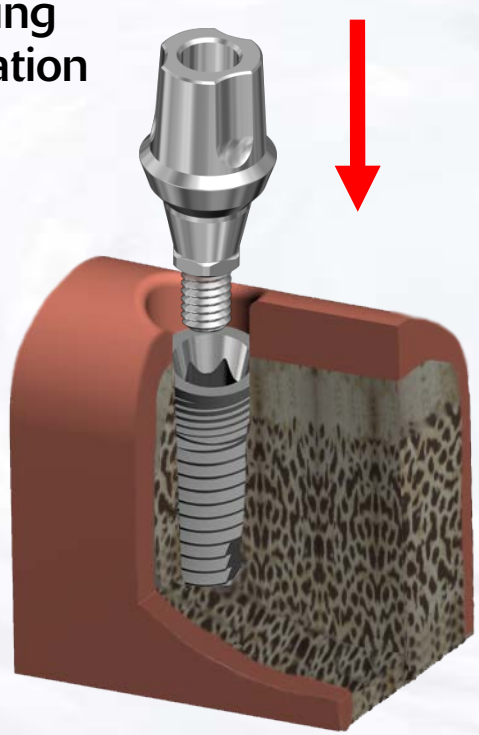

Use only light finger pressure to torque screw

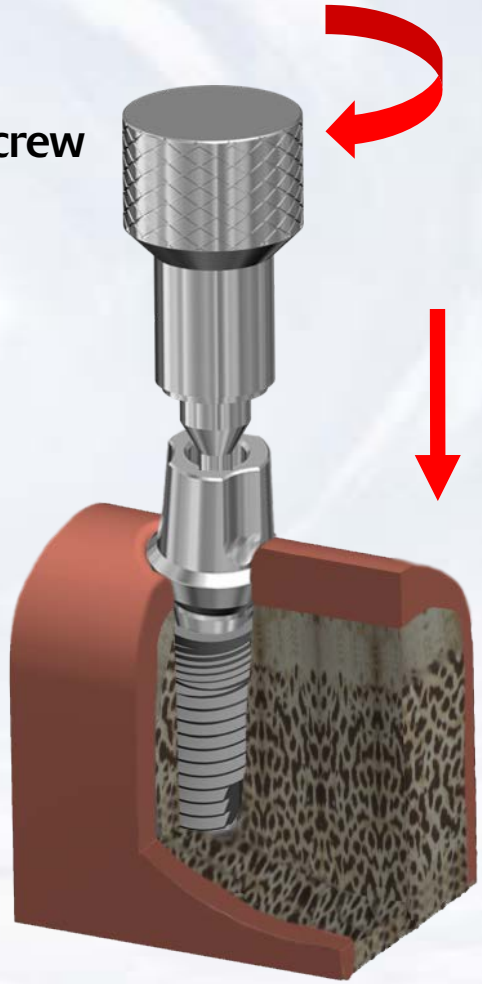

Blue Sky Bio

BIO|Max KISS Abutment

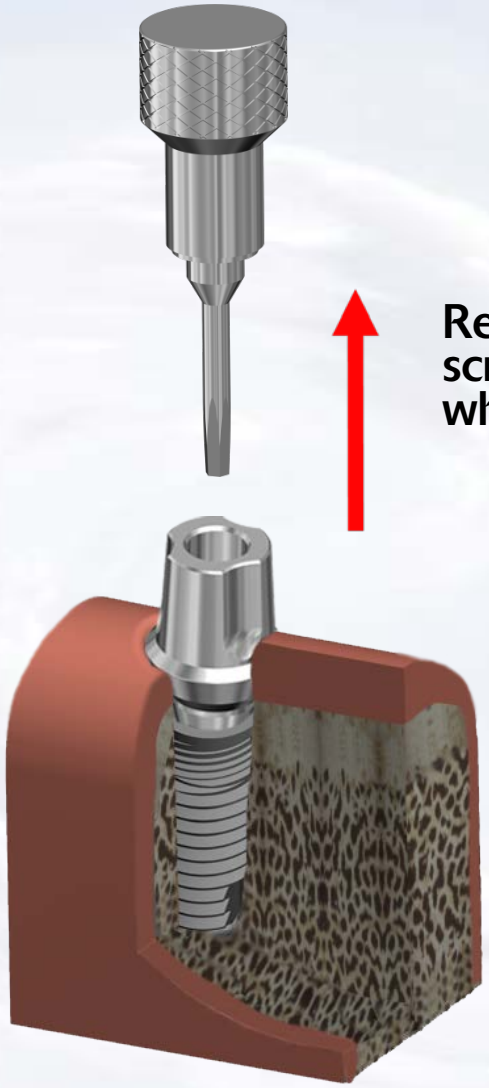

Remove the screwdriver thumb wheel assembly

Blue Sky Bio

BIO|Max KISS Abutment

Insert the hex driver within the 30Ncm torque ratchet

Insert driver into the abutment screw and turn torque ratchet until torque of 30 Ncm is reached and the head of the ratchet releases

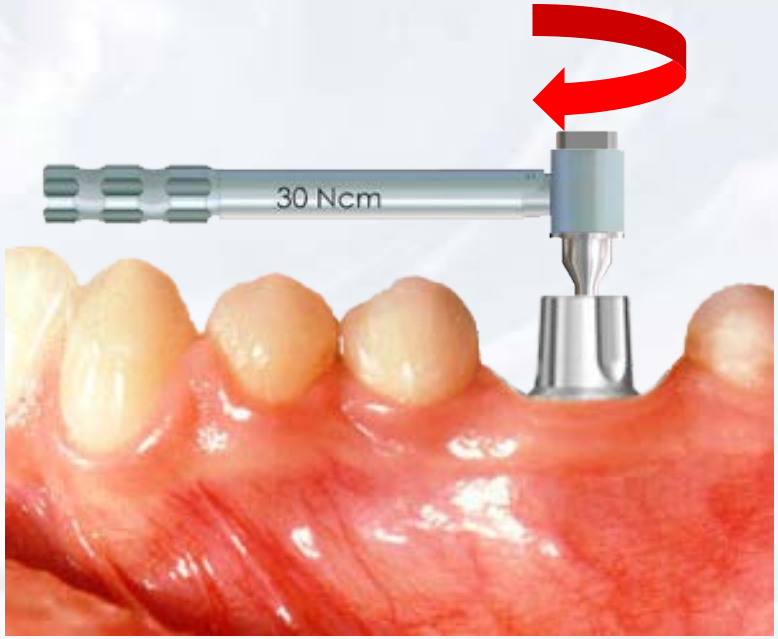

Blue Sky Bio

BIO|Max KISS Abutment

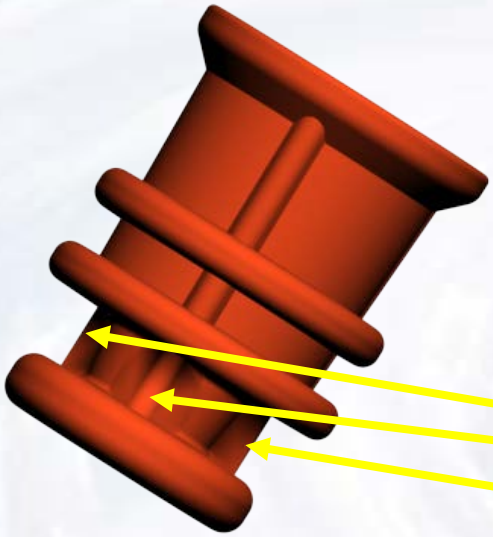

Plastic snap impression has three ribs that match the lobes inside the impression

Lobes within the impression matches flats on the abutment

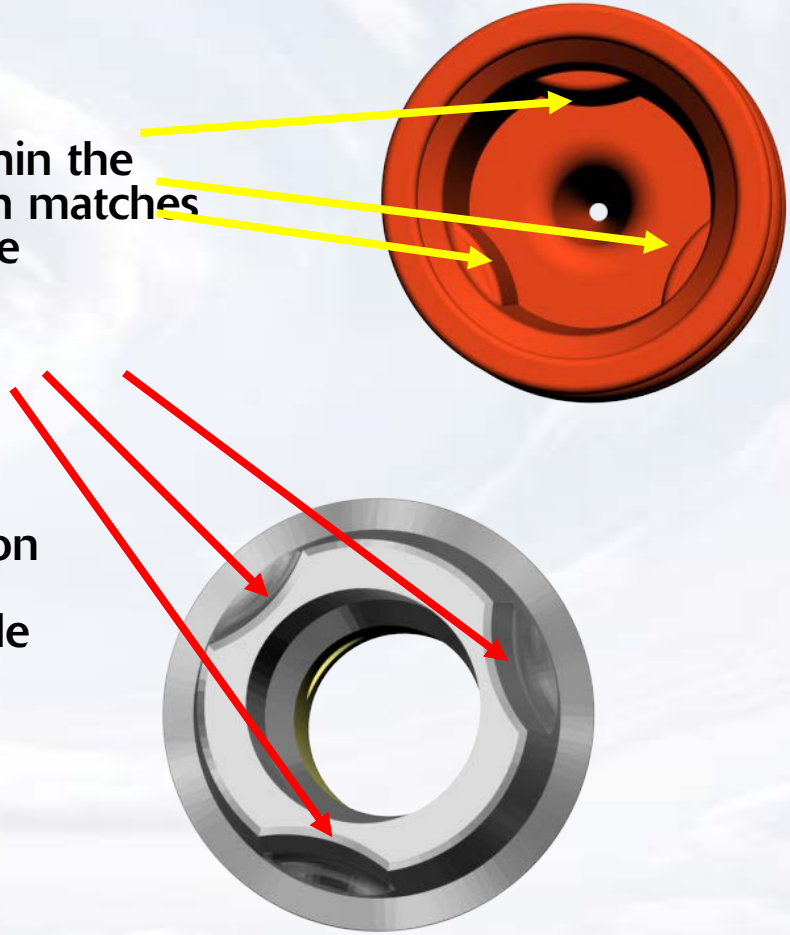

Blue Sky Bio

BIO|Max KISS Abutment

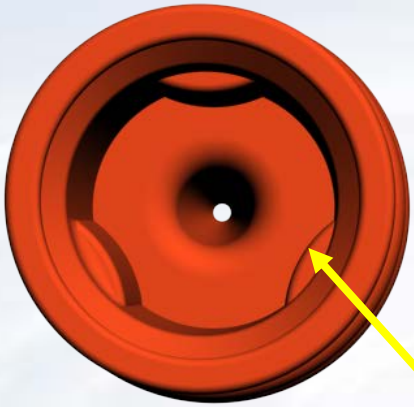

Line up the lobes of the KISS Abutment with the internal lobes of the snap impression coping

Seat snap impression coping on the solid abutment

The outside should snap on the bevel of the implant.

Blue Sky Bio

BIO|Max KISS Abutment

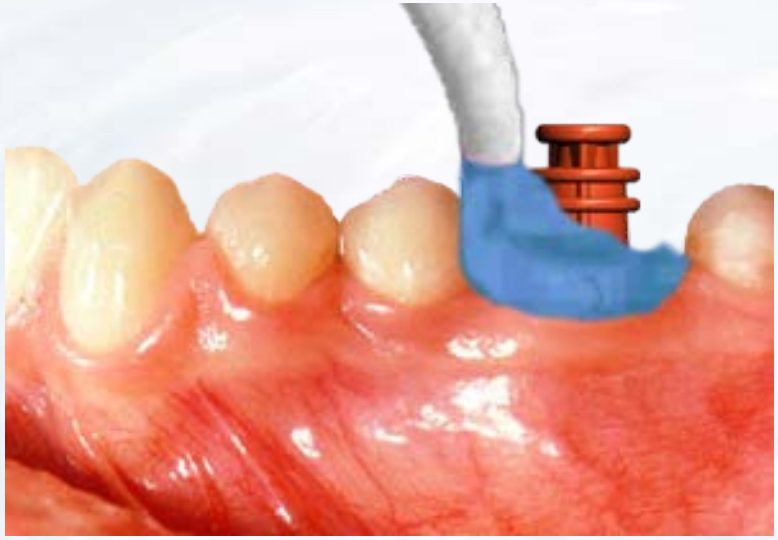

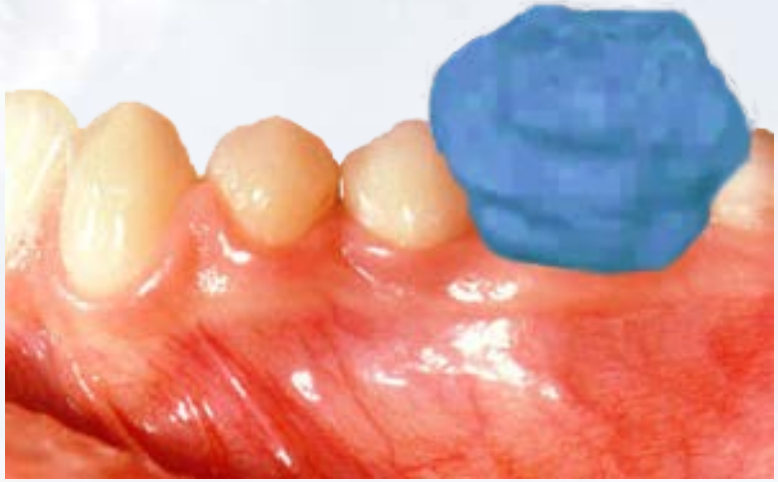

Inject impression material around the impression transfer

Blue Sky Bio

BIO|Max KISS Abutment

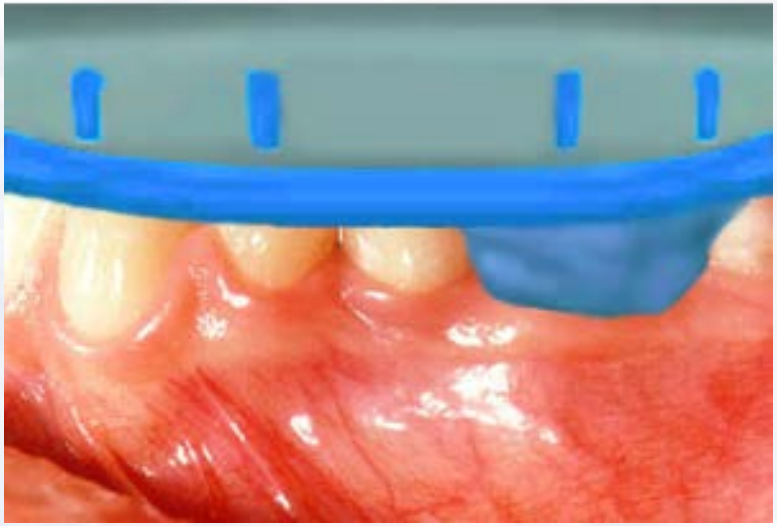

Insert tray with impression material

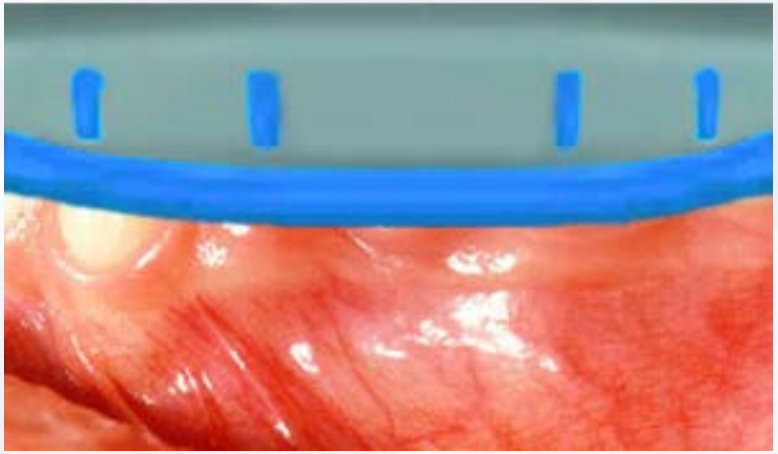

Seat impression to capture dental arch

Blue Sky Bio

BIO|Max KISS Abutment

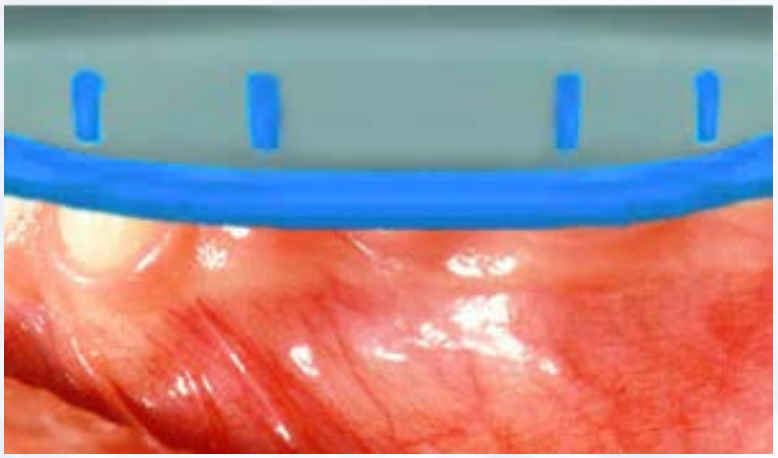

Remove the impression from the mouth when material has set

Impression snap is captured and picked up within the impression

Blue Sky Bio

BIO|Max KISS Abutment

Seat the temporary resin sleeve over the abutment

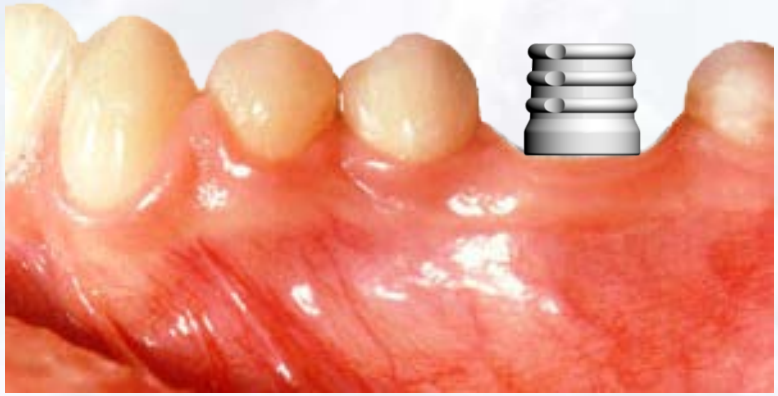

Use a crown form to reline over the sleeve to create a well fitting temporary

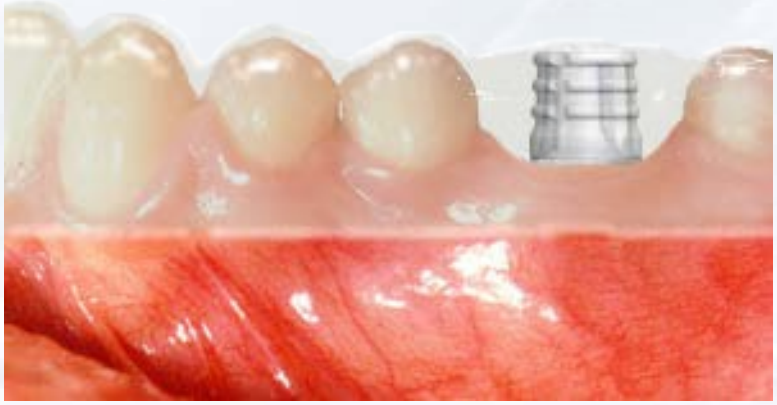

Blue Sky Bio

BIO|Max KISS Abutment

Laboratory abutment analog is inserted into the impression coping. Make sure to match the lobes on the abutment analog to the lobes of the impression snap

Blue Sky Bio

BIO|Max KISS Abutment

Apply soft tissue replica material around abutment level analog

Pour dental stone into impression

Blue Sky Bio

BIO|Max KISS Abutment

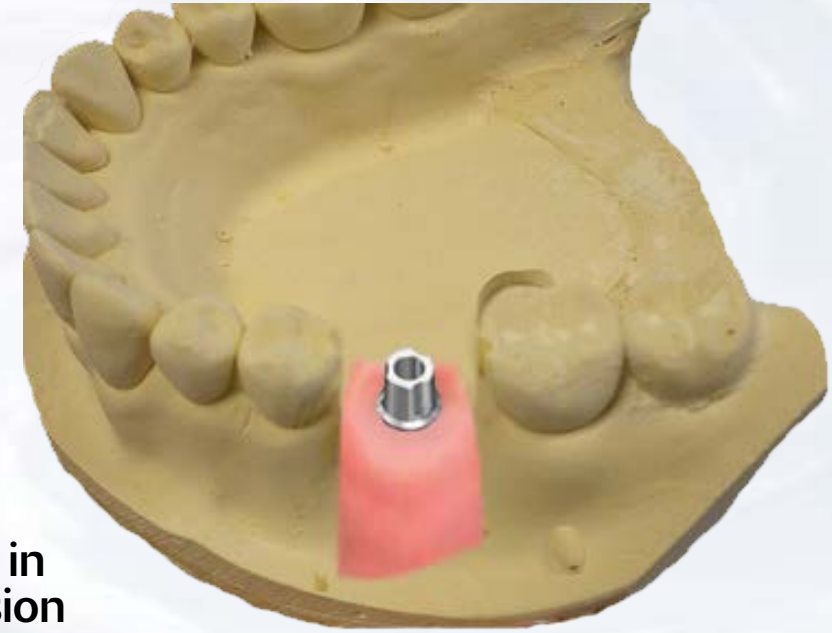

Dental stone model with analog in place after separation of impression from dried stone

Blue Sky Bio

BIO|Max KISS Abutment

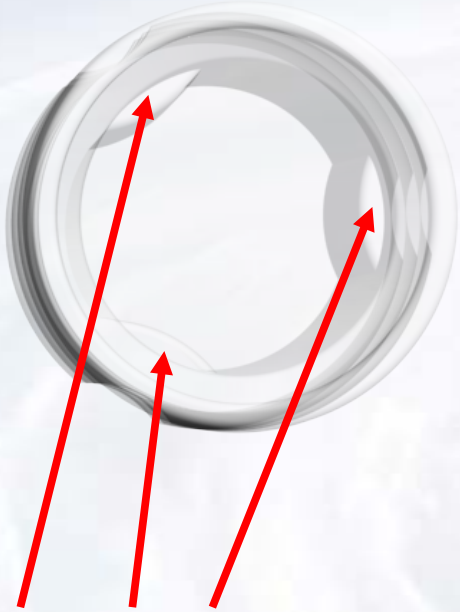

Engaging waxing sleeve has internal lobes to match the lobes on the abutment analog

Apply engaging waxing sleeve for a single crown, non-engaging waxing sleeve for a splinted multi-unit restoration.

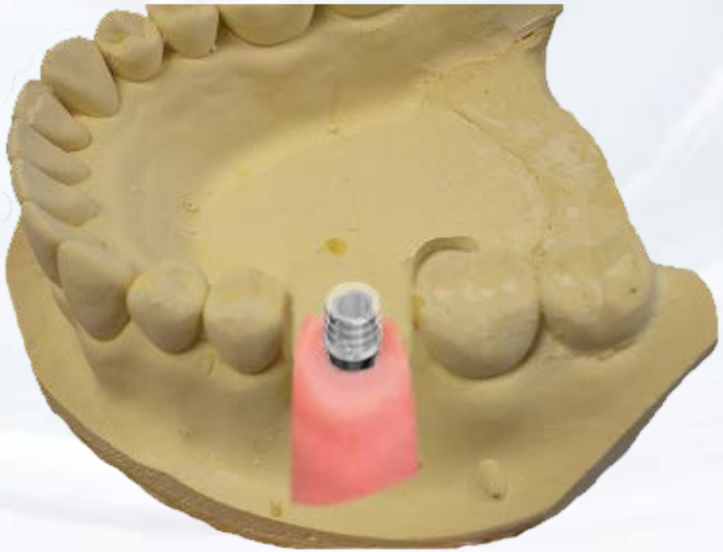

Blue Sky Bio

BIO|Max KISS Abutment

Apply wax over the waxing sleeve and complete the undercasting

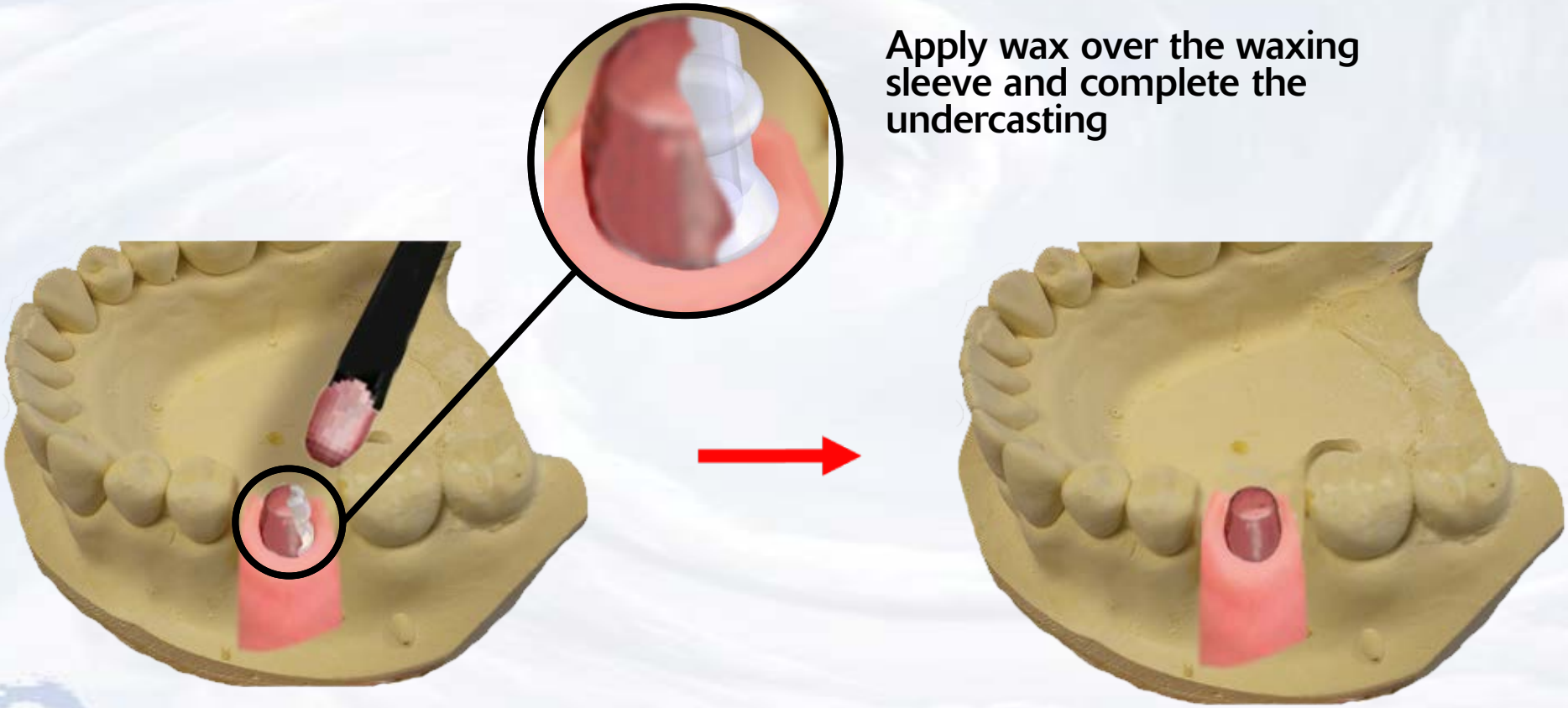

Blue Sky Bio

BIO|Max KISS Abutment

Cast wax up with the usual procedures and try in the casting on the stone model

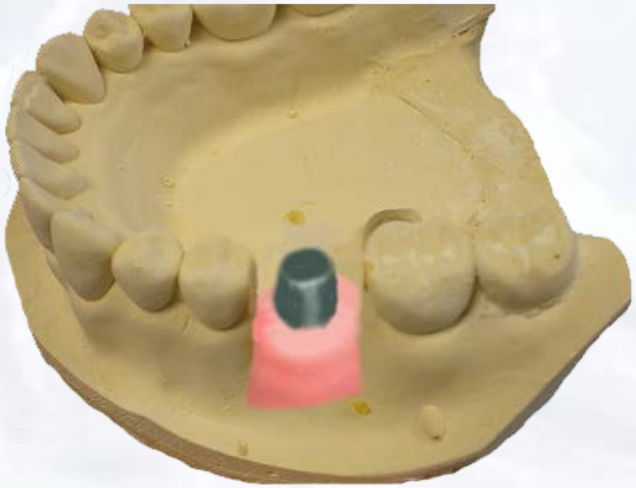

Stack and fire the ceramic in the usual manner

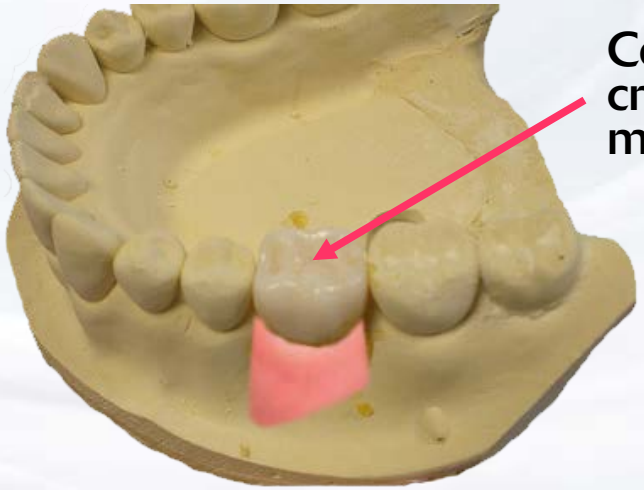

Ceramic crown on model

Blue Sky Bio

BIO|Max KISS Abutment

Cement restoration on abutment

Blue Sky Bio